S521-P OUTLINE WITH STAND

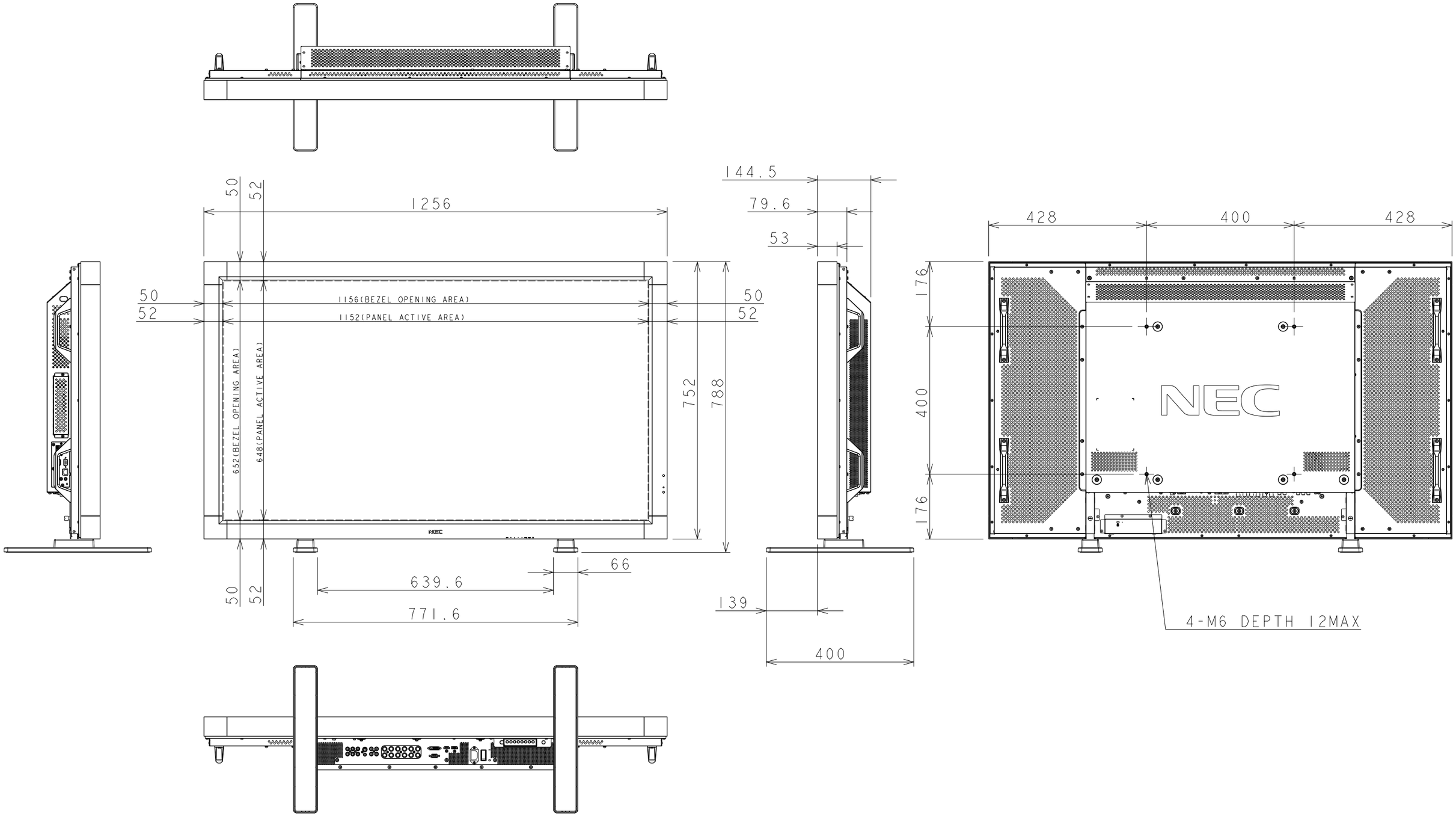

SIZE A3
SCALE 1/10
DIM mm