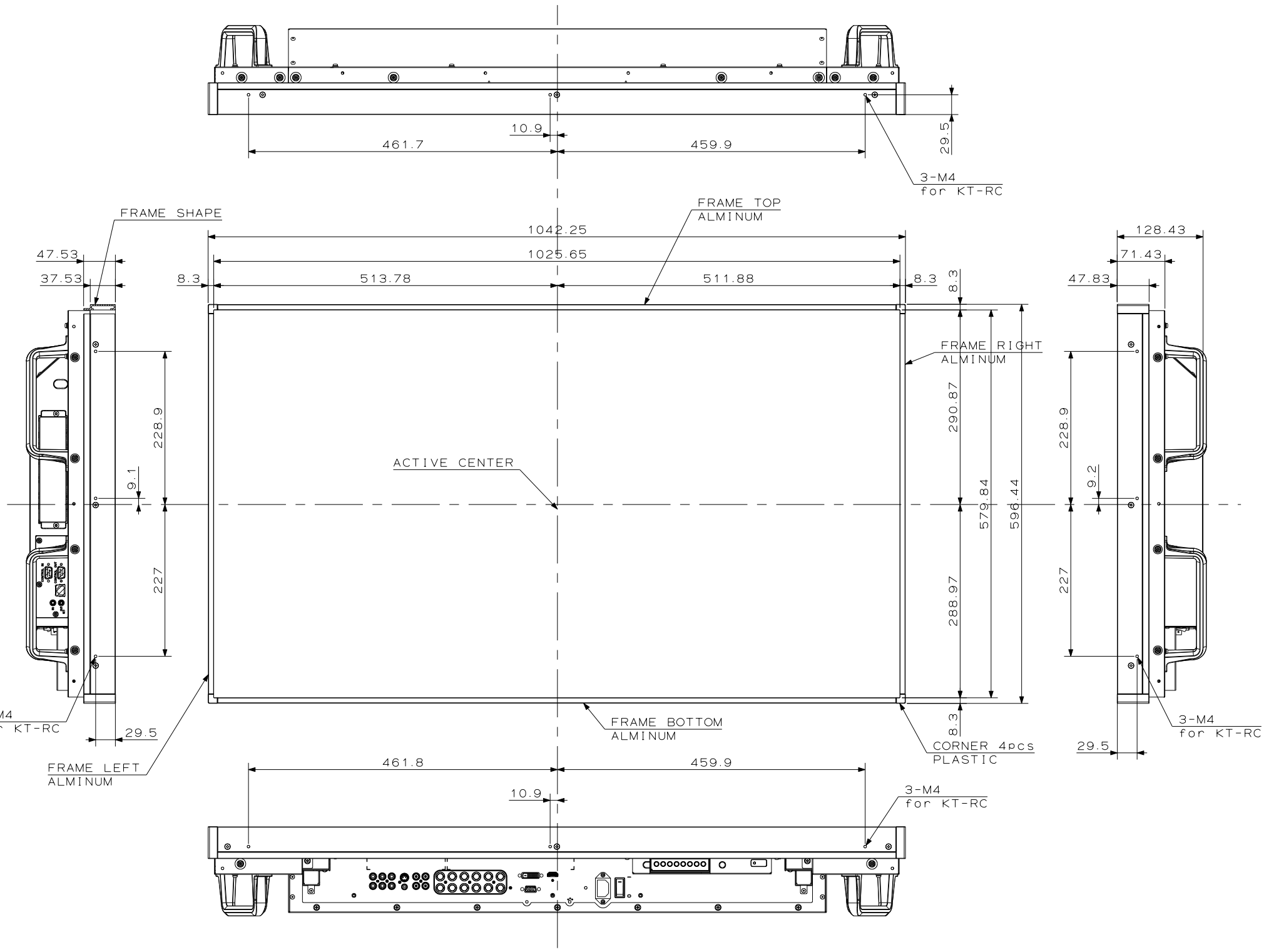

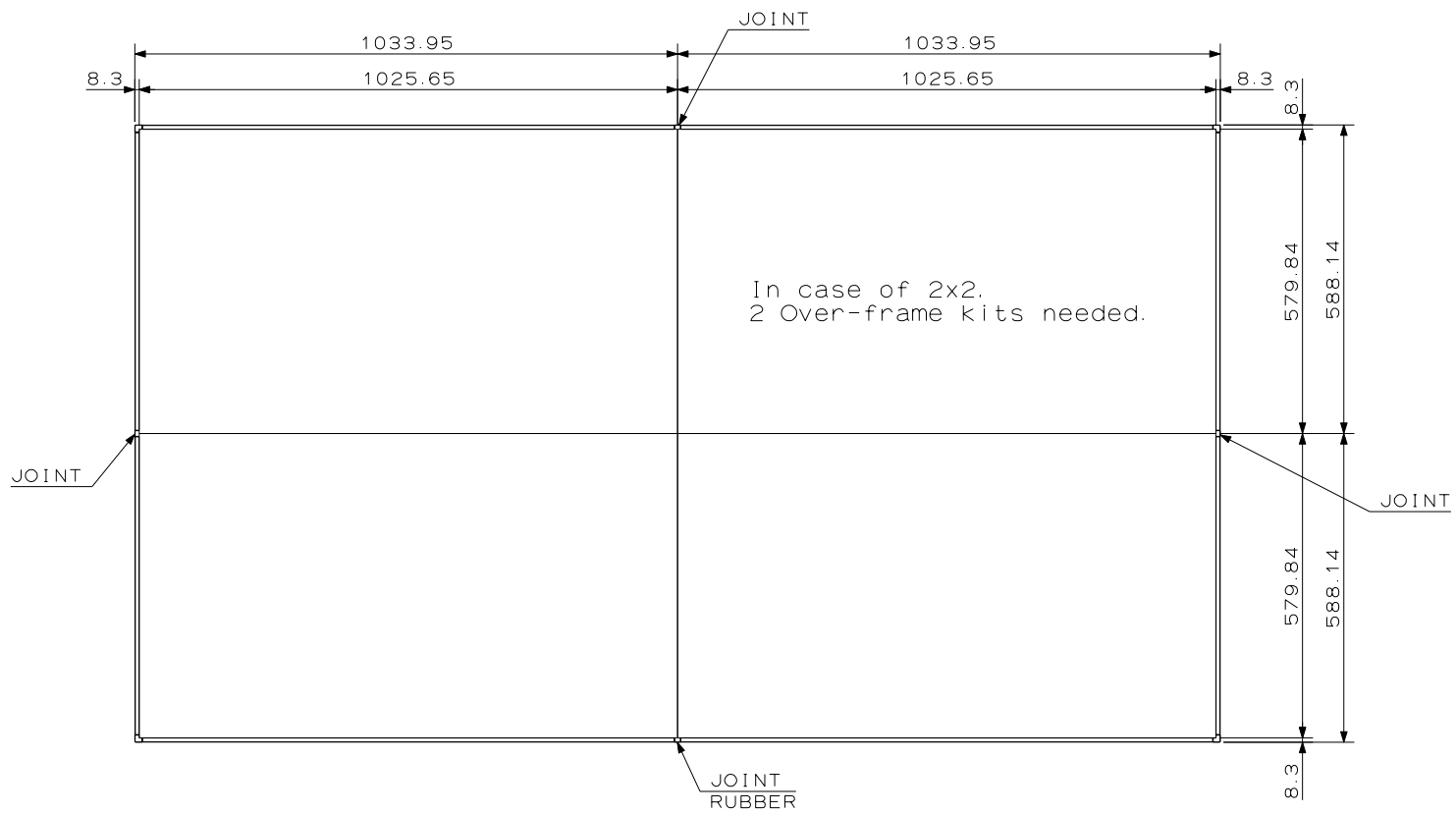

X461UN with Over-frame kit OUTLINE DRAWING

NEC Display Solutions. Ltd

2009/03/06