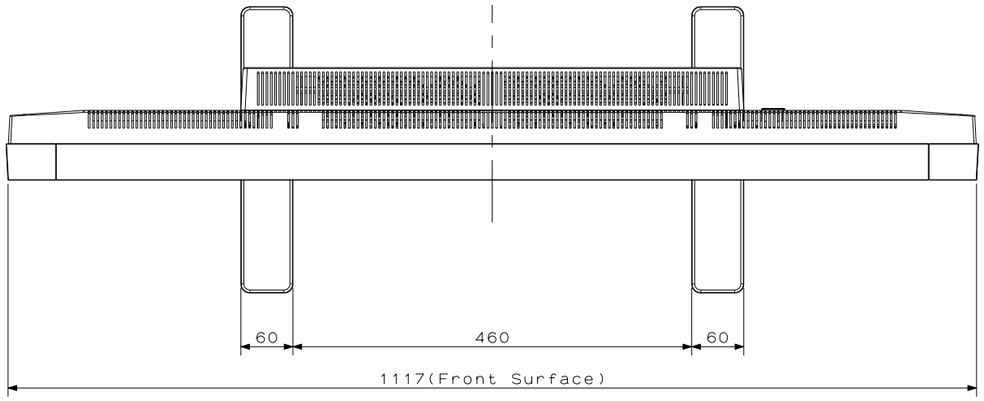

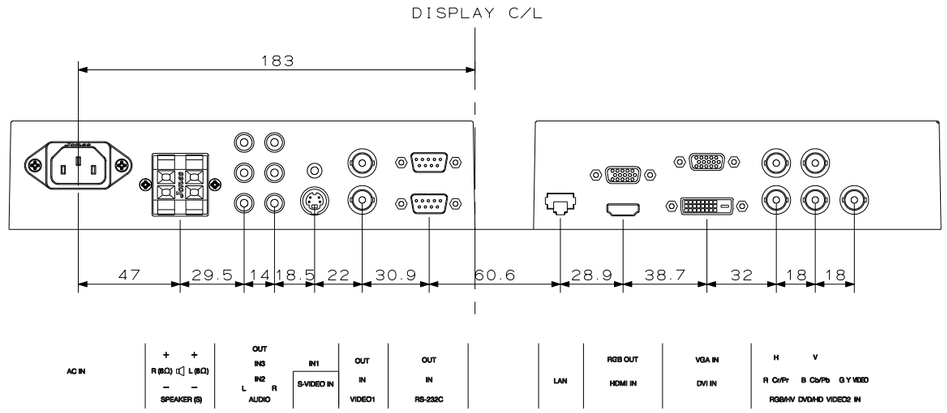

I/O TERMINAL

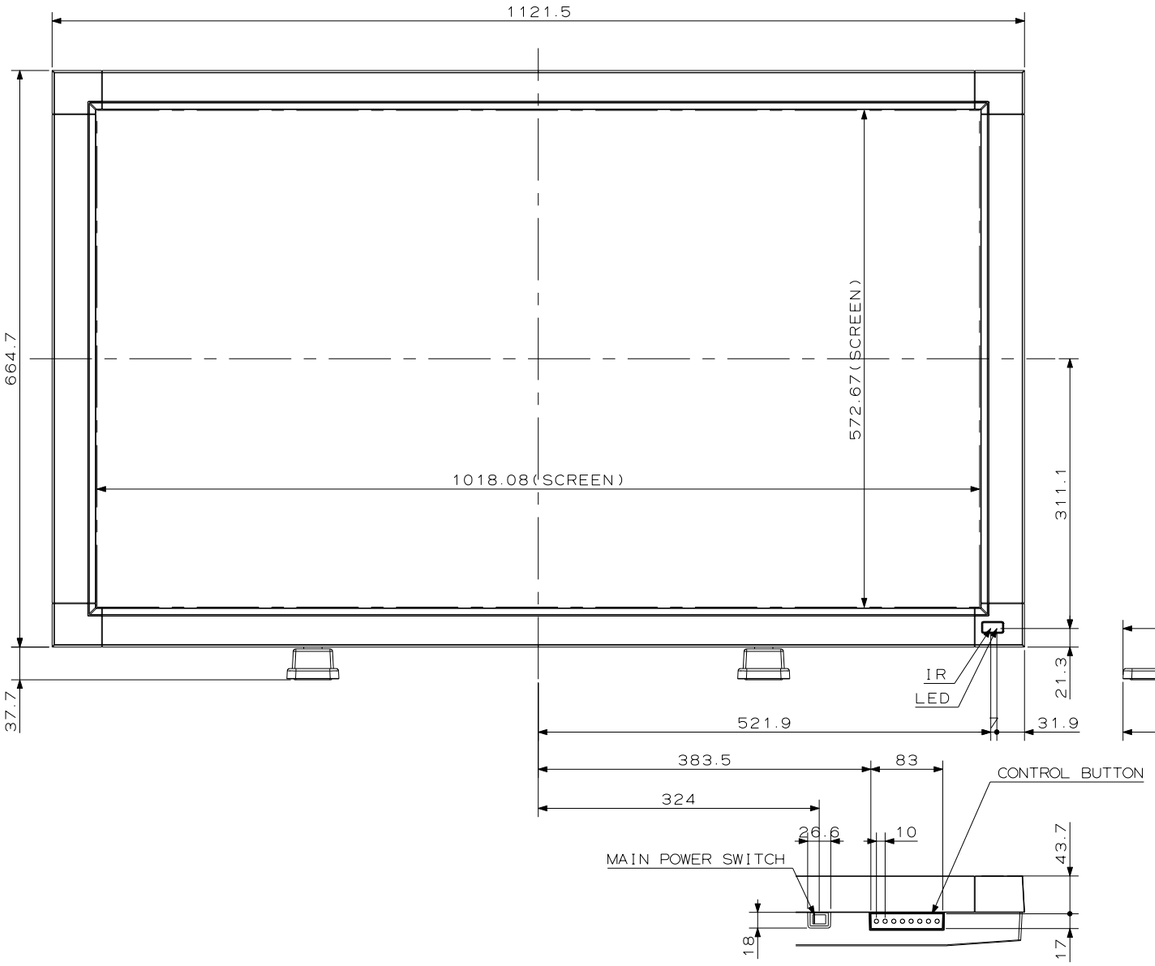

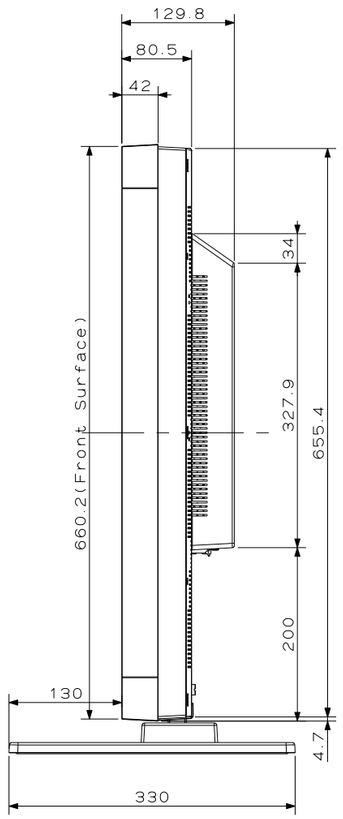

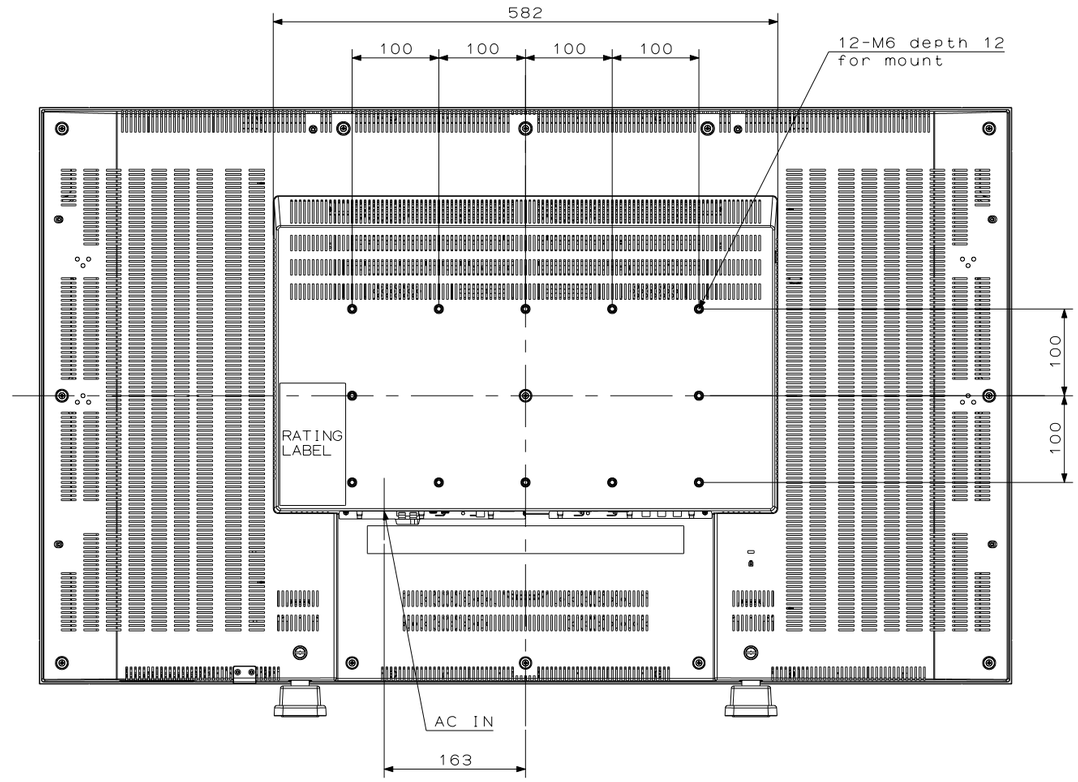

V461 with ST-4020 OUTLINE DRAWING

NEC DISPLAY SOLUTIONS.LTD.