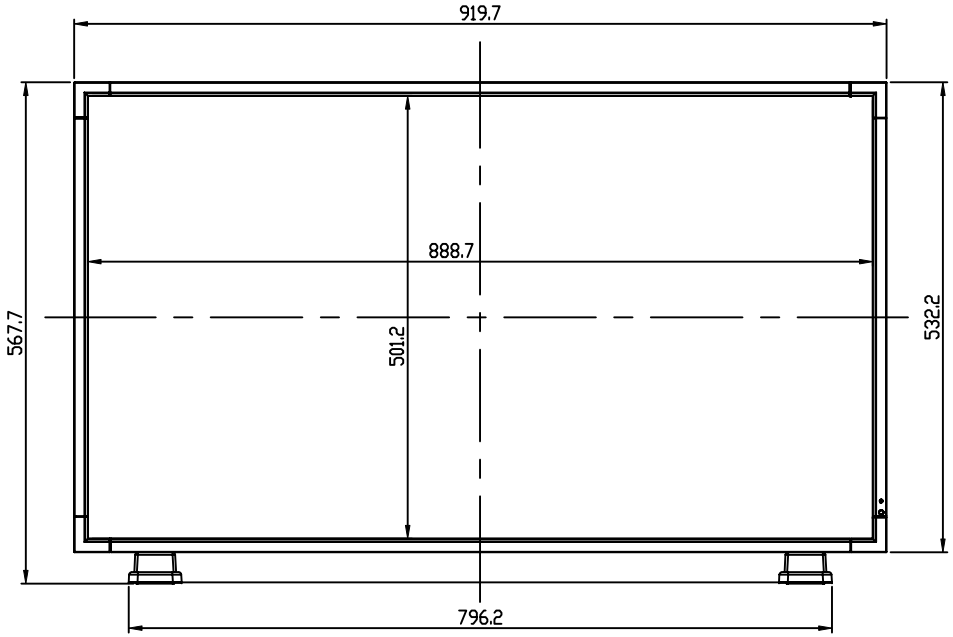
919.7
888.7
567.7
501.2
532.2
796.2

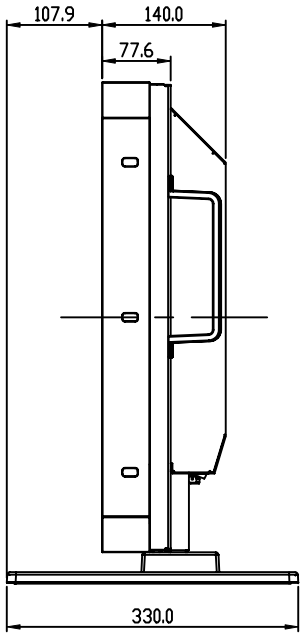
107.9
140.0
77.6
330.0

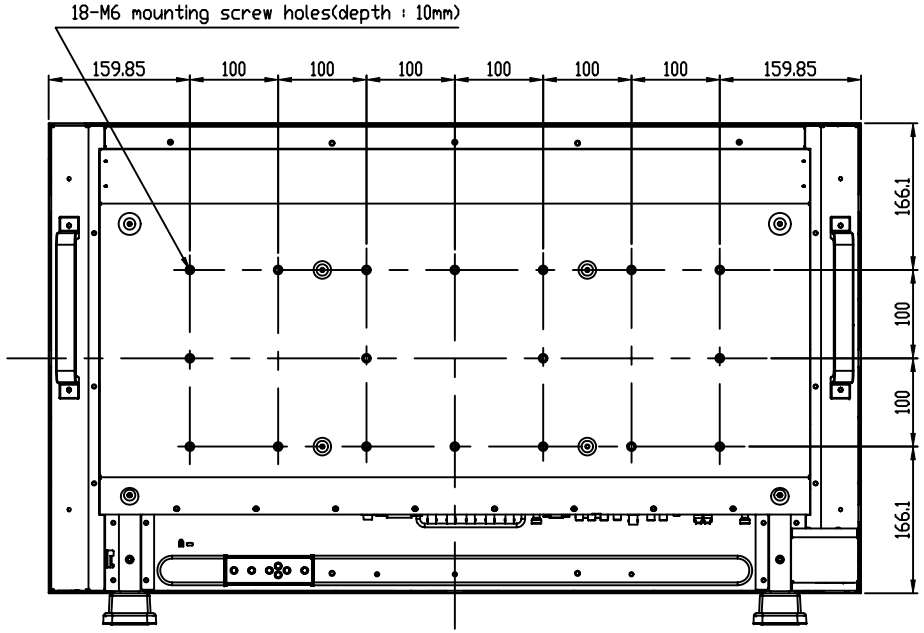
18-M6 mounting screw holes(depth : 10mm)
159.85
100
100
100
100
100
100
159.85
166.1
100
100
166.1