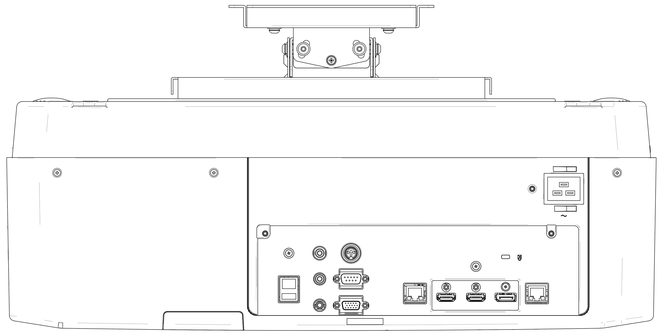

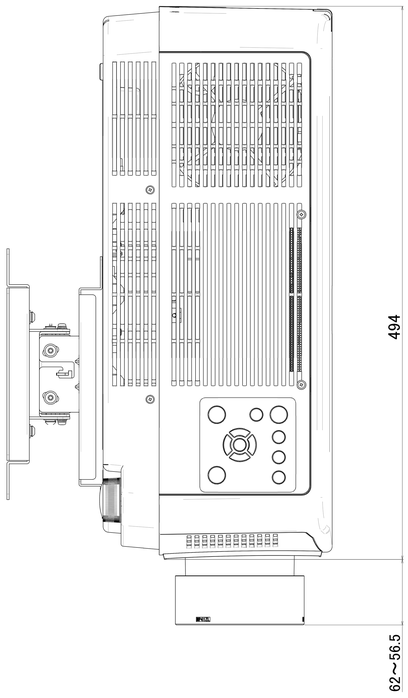

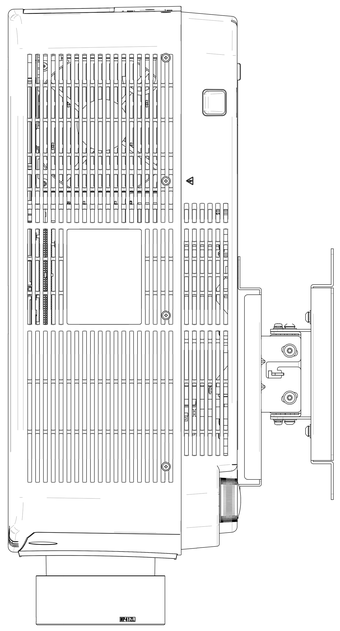

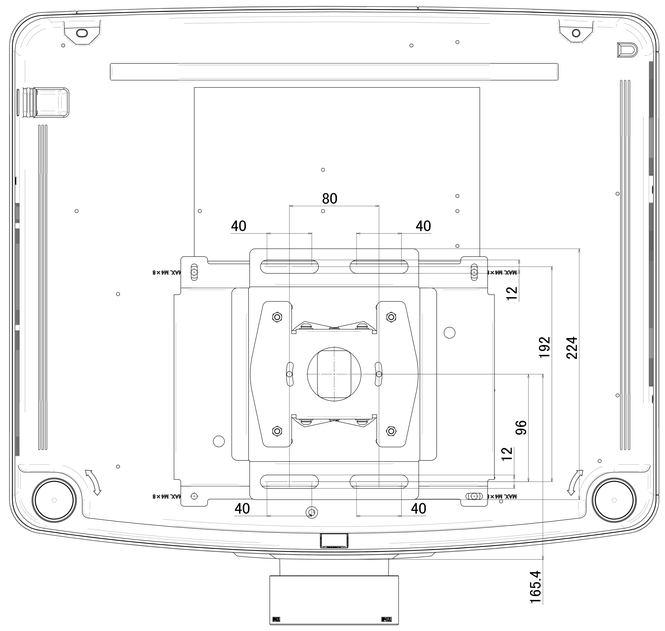

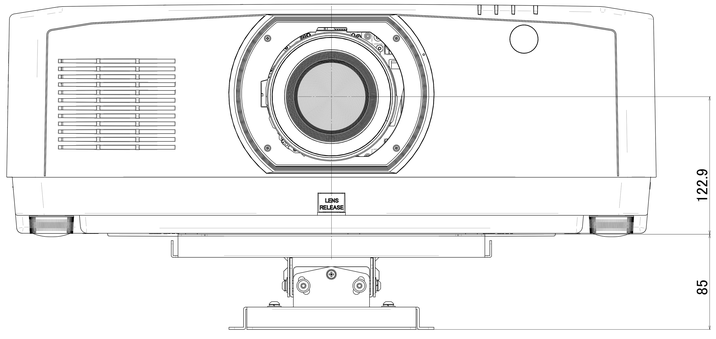

REV	DESCRIPTION
1	2017.03.09
NEC Display Solutions, Ltd.	