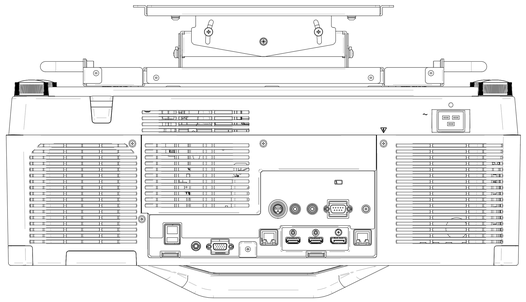

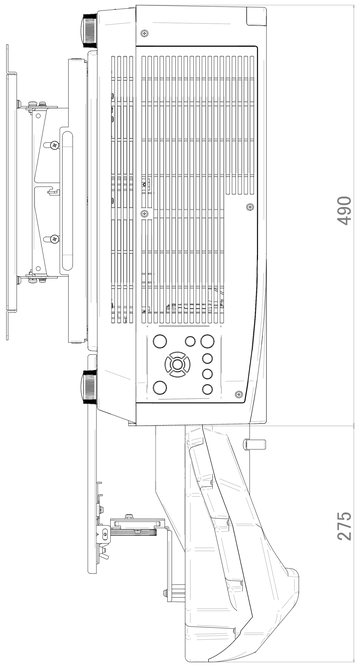

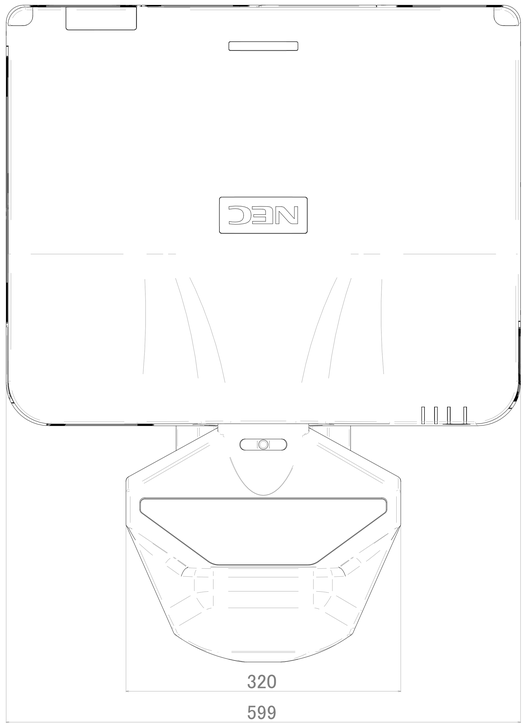

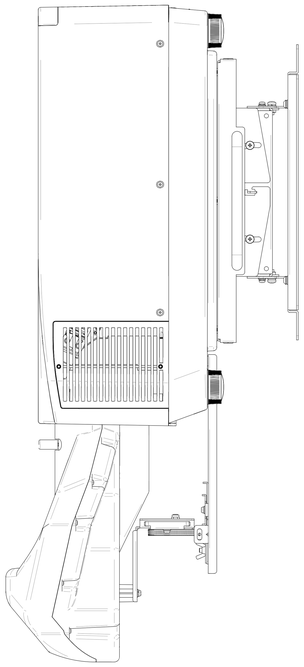

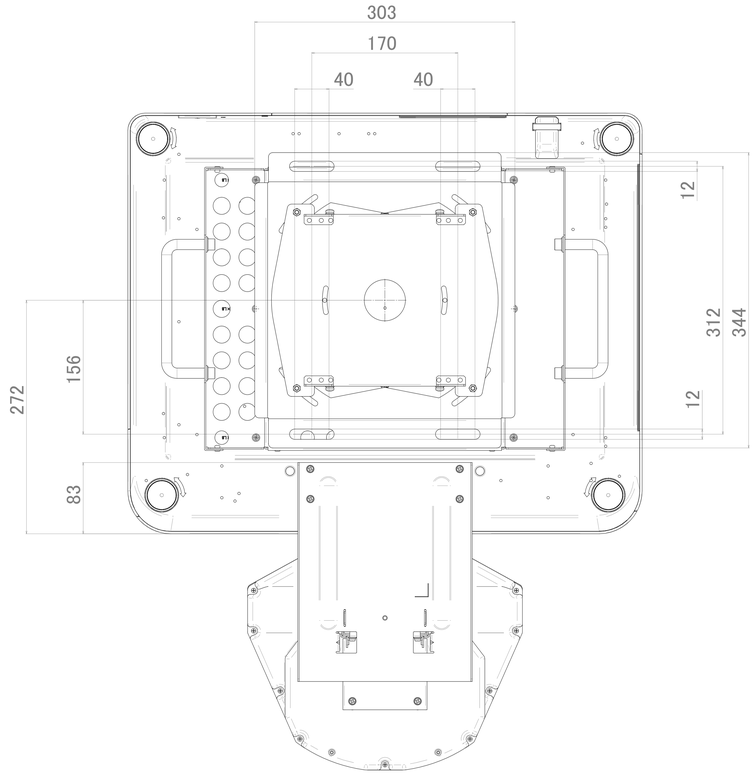

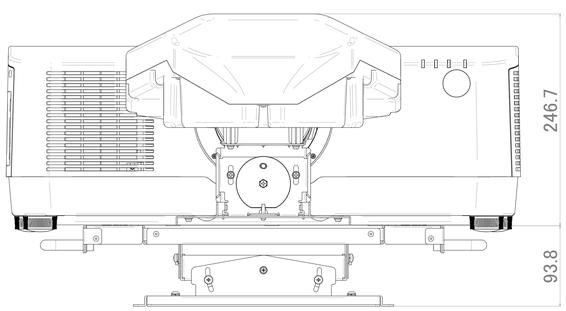

REV	DESCRIPTION
1	2021.06.02
Sharp NEC Display Solutions,Ltd.	